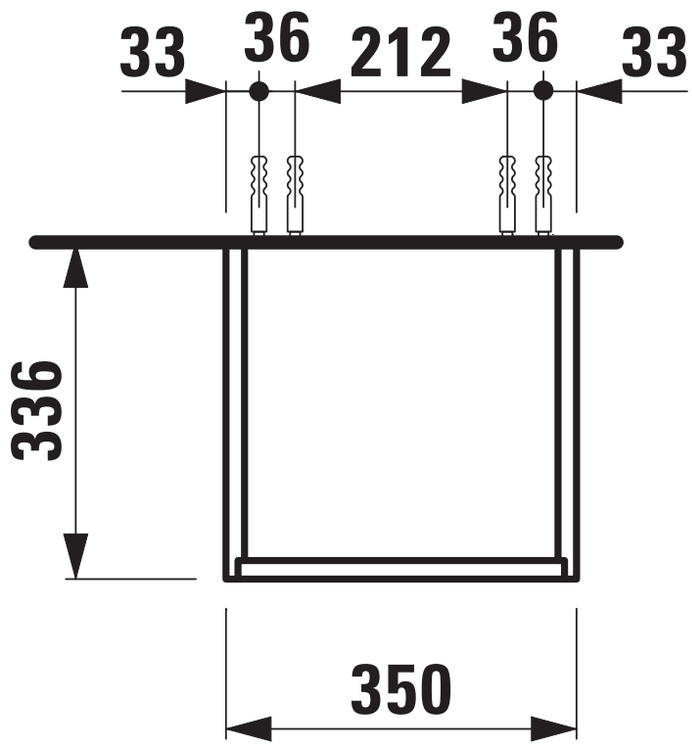

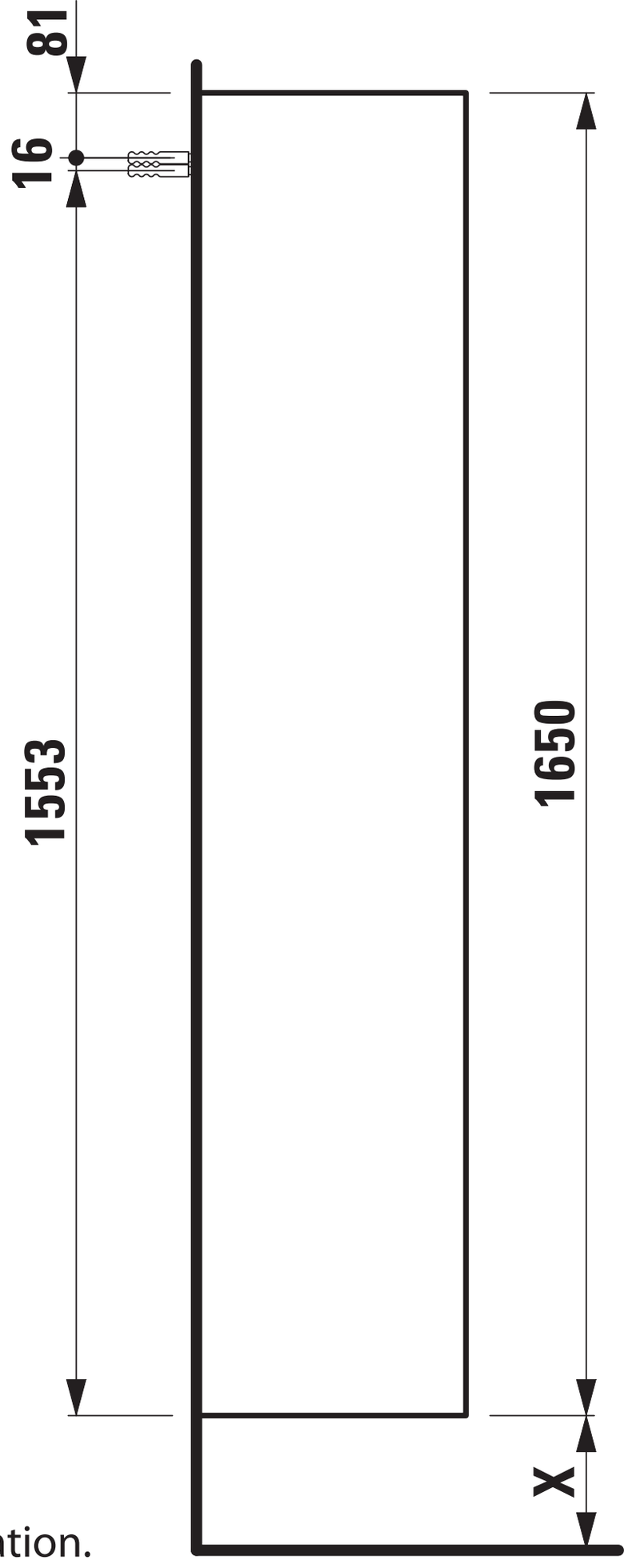

X = The exact hight must be set during installation.