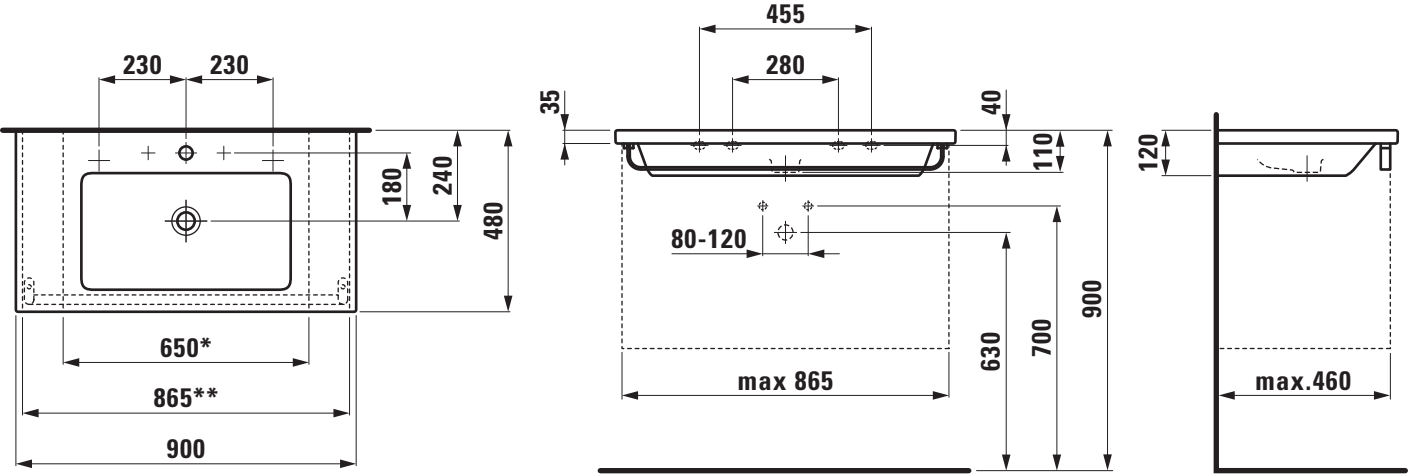

* = minimum measure for cutting / ** = minimum measure for cutting with towel rail