AXOR

hansgrohe

Rebris E
Single lever shower mixer set for concealed installation
Surfaces: **Chrome** Article Number: **72658000**

Description

product features

- consists of: single lever shower mixer, basic set
- 1 function
- maximum flow rate at 3 bar: 28,7 l/min
- ceramic cartridge
- temperature limitation adjustable
- connection type: basic set
- min. operating pressure: 1 bar
- max. operating pressure: 10 bar

Design awards

DESIGN AWARD 2022

reddot winner 2022

ICONIC AWARDS 2022 INNOVATIVE ARCHITECTURE winner

Certificates

DIN DVGW CERT

Product image

Scale drawing

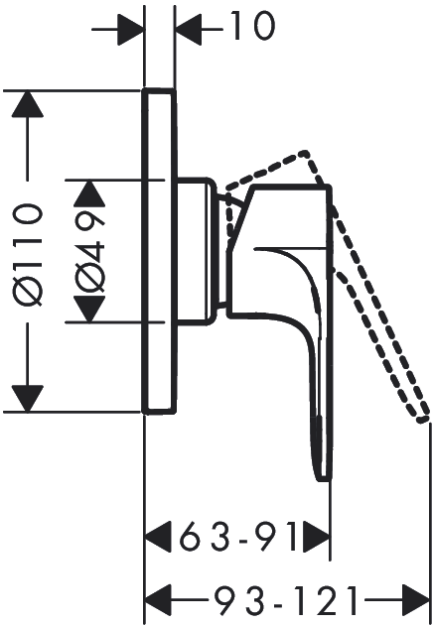
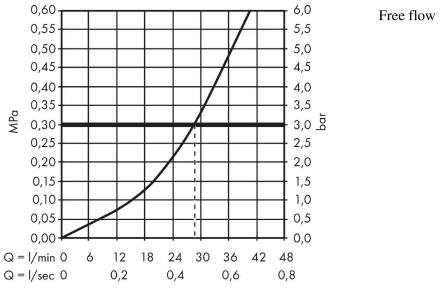
Flowchart