IL BAGNO ALESSI ONE FURNITURE

Vanity unit
42402.3
42403.3
42404.3

TECHNICAL DATA

Order no.	42402.3, 42403.3 / 2 drawers 42404.3 / 1 drawer
Dimensions (WxHxD)	800 x 332 x 500 mm
Matching for	42402.3 – washbasin, order no. 81897.1 42403.3 – washbasin, order no. 81897.2 42404.3 – washbasin, order no. 81397.1
Specification	Body/Front – Surface lacquered real wood veneer or lacquered white with technical marble top Integrated handle in the front 1 cut out
Weight	630 – 32,5 kg 631 – 38,5 kg

Accessories excl.	Drawer separations small, order no. 49240.1 large, order no. 49240.2 Space saving siphon, order no. 89424.0
Mounting acc. incl.	Installation set, order no. 49240.7
Mounting information	The walls installed on must meet the requirements of the furniture in terms of weight and the supplied fastening elements. If this cannot be guaranteed another method of installation needs to be chosen.
Colours	630 – Noce canaletto, surface lacquered real wood veneer 631 – White, surface lacquered with technical marble top

TECHNICAL DRAWINGS / S 1 : 20

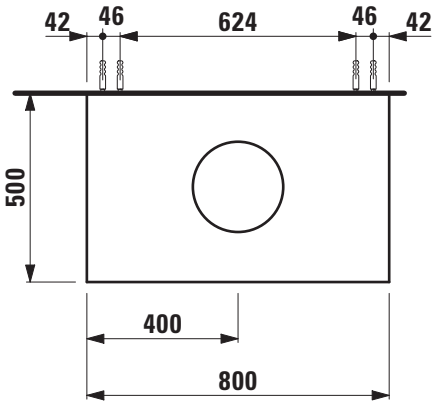

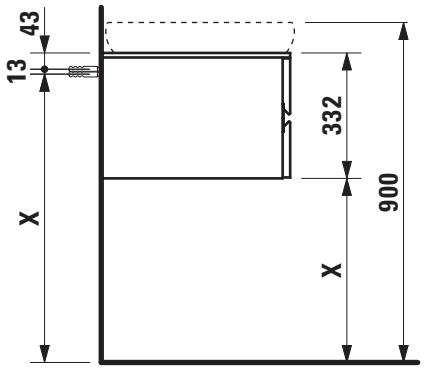

X = The exact hight must be set during installation.